JRC

NAVTEAM
Professional Marine Electronics

Marine VHF radiotelephone

JHS-800S

Intuitive touch display operation

www.jrc.am

Features

Our new 5-inch touch screen controlled Class A VHF radio (JRC model JHS-800S) featuring a uniform, corporate design with manual-free operation. The all-in-one unit (control unit with speaker, radiotelephone and DSC) has high sensitivity performance, Hi-Fi output and protection rate of IP56.

- Easy operation
- 5-inch color LCD touch display
- Class A DSC complying latest GMDSS requirement
- High quality sound (Hi-Fi audio)
- Easy to install by compact design
- Up to 4 remote controllers
- All-in-one design
- New designed speaker and handset
- Bluetooth® interface for wireless speaker mic[1]
- Waterproof design (IP56)

1. coming soon

Overview

This equipment has standard functions that include regular radiotelephone and DSC (digital selective calling) for distress transmissions, as well as functions to playback and record radio calls in real-time and an easy-to-operate self-diagnosis function.

Touch display

As of February 2019 the JHS-800S is the world's first Class A marine VHF radio-telephone featuring a 5-inch high-brightness color LCD touch screen, which makes it an outstanding innovative design.

The backlights of the LCD screen with a wide viewing angle and the operation buttons are fully adjustable, preventing interference while keeping night watch.

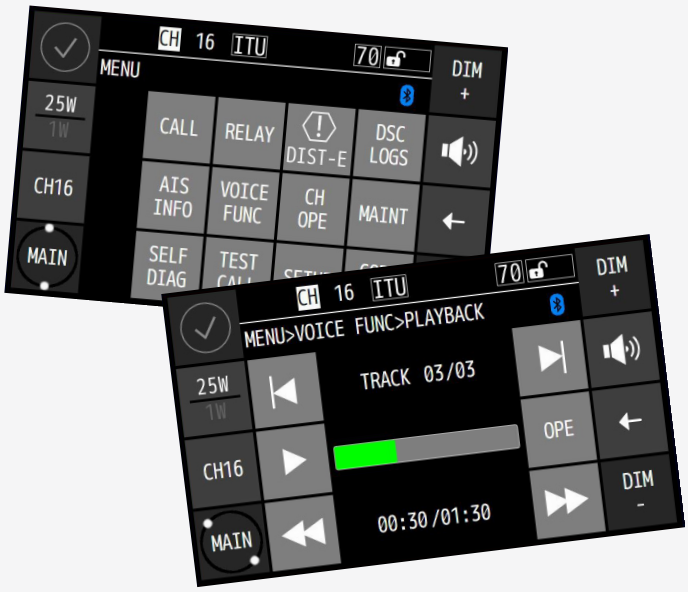

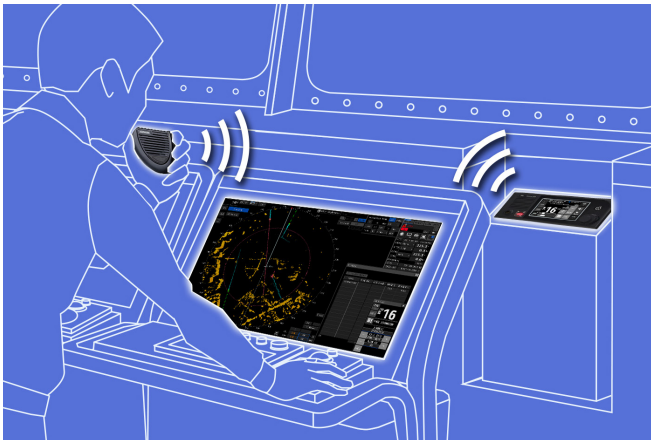

Bluetooth®

The JHS-800S even has a Bluetooth® interface for connecting to an external wireless speaker mic (option).

The JHS-800S channel settings and DSC calls can be operated remotely from the JRC MFD. While watching the MFD, you can talk on a location away from the JHS-800S equipment, using a wireless speaker mic[2].

2. coming soon

Voice recording

The received voice recording (up to 8 minutes) and playback function enables later confirmation or temporary saving of communications.

Audio

The digital audio amplifiers, equalizer function for deep-normal-high voice, specially designed speakers and new handset offer superior sound quality. A remote standalone microphone and pedalswitch can be connected to via a junctionbox.
It is possible to operate the VHF with optional controllers up to 100 m away from the bridge.

In the box

• Marine VHF radiotelephone	JHS-800S
• Handset	NQW-980
• Power cable	CFS-810
• Accessory cable	CFS-820
• Bridge card	7ZPJD0741
• Spare parts	0997015.WXN

Tech Specs

Marine VHF radiotelephone RoHS

JHS-800S Weight 2.1 kg (4.63 lbs)

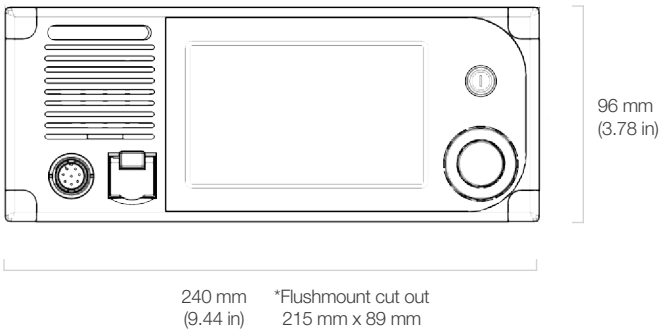

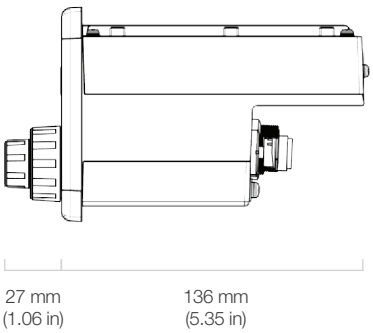

- The Bluetooth® word mark and logos are registered trademark of Bluetooth SIG, INC.
- Bluetooth® interface: Bluetooth® 3.0 Class2
- Wireless speaker mic is a product made by SAVOX Corporation.

www.jrc.am

Centers of Excellence

Houston, Rotterdam, Singapore, Tokyo

Product and/or specifications could change without notice

© All rights reserved, JRC/AM -18.010/170/1